A1

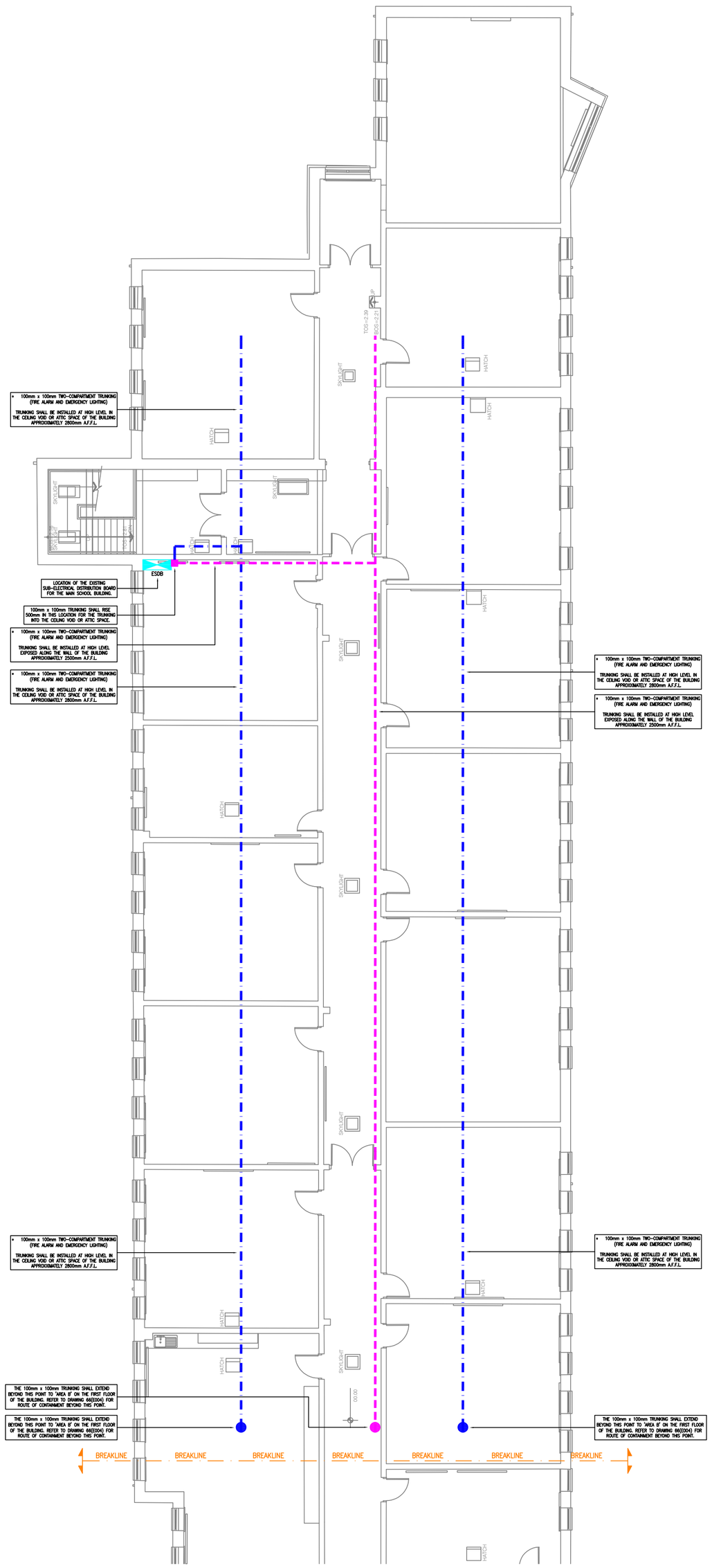

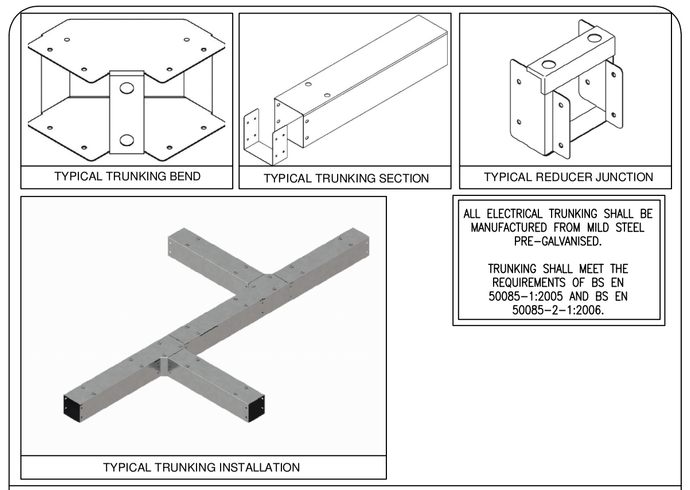

TYPICAL GALVINISED STEEL TRUNKING CONTAINMENT DETAILS

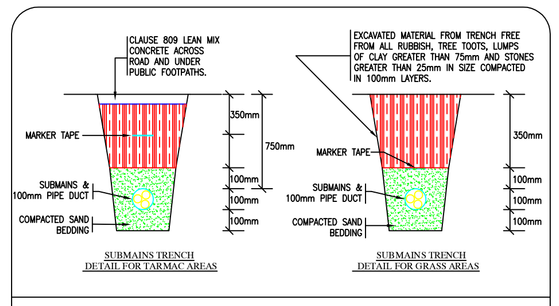

DETAIL A

DETAIL FOR THE TRENCH REQUIRED FOR ALL ELECTRICAL CABLING

Summary of colour code for buried plastic piping

(see Irish Standard 370:2016 – Colour code for buried plastic piping).

WARNING: This code applies to new installations. All users should be aware that a high proportion of existing underground services are in ducts and pipes which do not conform to the colour requirements set out in I.S. 370:2016.

- **Public lighting** (and control cables operating at 125 volts and above): Red
- **Storm and Road drain** (Smooth external wall duct, corrugated): Black
- **Telecom/Fibre optic** (smooth external wall duct): Green OR Grey; OR Any colour except red, yellow or orange
- **Telecom/Fibre optic** (corrugated duct only - maximum pipe outside diameter 175 mm): Any colour except red, yellow or orange
- **Street furniture** (signal below 125 volt): Orange
- **Gas**: Yellow with black stripes OR Yellow with brown stripes OR Yellow with green stripes OR Yellow with blue stripes OR Yellow with red stripes OR Yellow OR Black with yellow stripes OR Orange OR Black with orange stripes
- **Electricity**: Red
- **Sewer**: Black OR Brown OR Black with brown stripes
- **Potable water**: Black OR Blue OR Blue with brown stripes OR Black with blue stripes OR Black or blue with coloured stripes (excluding yellow and orange)

COLOUR CODING OF DUCTS IN TRENCHES FOR M&E SERVICES

CABLE CONTAINMENT SERVICES SYMBOLS

EMDB	EXISTING MAIN DISTRIBUTION ELECTRICAL BOARD FOR THE BUILDING.
ESDB	EXISTING SUB-DISTRIBUTION ELECTRICAL BOARD FOR THE BUILDING.
NMFAP	NEW MAIN FIRE ALARM PANEL FOR THE BUILDING
	NEW GALVANISED STEEL TWO-COMPARTMENT TRUNKING INSTALLED AT HIGH LEVEL EXPOSED ALONG THE WALL IN THE BUILDING. REFER TO THE DRAWING FOR SIZE OF TRUNKING.
	NEW GALVANISED STEEL TWO-COMPARTMENT TRUNKING CONCEALED IN ATTIC SPACE OR CEILING VOID IN THE BUILDING. REFER TO THE DRAWING FOR SIZE OF TRUNKING.
	DENOTES NEW 100mm UNDERGROUND uPVC DUCT (RED) FOR UNDERGROUND EARTH CABLING FROM THE NEW MAIN ELECTRICAL BOARD. REFER TO THE 'DETAIL A' ON THIS DRAWING REGARDING THE TRENCH REQUIRED. ALL TRENCHING AND DUCTING SHALL BE COMPLETED BY THE ELECTRICAL CONTRACTOR AS PART OF THIS CONTRACT.
	DENOTES NEW EXTERNAL TRENCH C/W UNDERGROUND uPVC DUCTS (NUMBER OF DUCTS REQUIRED ARE HIGHLIGHTED ON DRAWING) TO BE EXCAVATED AND COMPLETED BY THE CONTRACTOR FOR UNDERGROUND ELECTRICAL CABLING BETWEEN THE BUILDINGS. REFER TO THE 'DETAIL A' ON THIS DRAWING REGARDING THE TRENCH REQUIRED. ALL TRENCHING AND DUCTING SHALL BE COMPLETED AND INSTALLED BY THE CONTRACTOR AS PART OF THIS CONTRACT. REFER TO DRAWING FOR SIZE AND LENGTH OF TRENCH REQUIRED.

GENERAL NOTES:

1. THIS DRAWING IS TO BE READ IN CONJUNCTION WITH THE PARTICULAR SPECIFICATIONS.

2. THE CONTRACTOR SHALL CO-ORDINATE FULLY WITH ALL OTHER TRADES BEFORE COMMENCING WORK. THE CONTRACTOR SHALL BE RESPONSIBLE FOR THE CO-ORDINATION OF ALL SERVICES AND WORKS REQUIRED FOR THE PROJECT. THE CONTRACTOR SHALL CO-ORDINATE FULLY WITH ALL OTHER TRADES BEFORE COMMENCING WORK.

3. EXTRA COSTS INCURRED DUE TO THE CO-ORDINATION EXERCISE NOT BEING COMPLETED WILL NOT BE ACCEPTED BY THE ENGINEER.

4. DO NOT SCALE THIS DRAWING. ALL DIMENSIONS TO BE TAKEN ON SITE. ALL DIMENSIONS IN mm, UNLESS STATED OTHERWISE

5. EXACT LOCATIONS OF ALL SERVICES TO BE AGREED ON SITE. FINAL LOCATIONS OF ALL SERVICES TO BE CO-ORDINATED ON SITE WITH EXISTING LOOSE AND FIXED FURNITURE LAYOUTS IN THE ROOM.

6. THE CONTRACTOR SHALL BE RESPONSIBLE FOR ALL ELECTRICAL WORKS AND BUILDERS WORKS AS IDENTIFIED ON THE DRAWINGS AND IN THE SPECIFICATIONS.

7. THE MAJORITY OF THE EXISTING ELECTRICAL INSTALLATION IN THE BUILDING SHALL BE DECOMMISSIONED AND REMOVED AND REPLACED WITH NEW ELECTRICAL INSTALLATIONS. THE CONTRACTOR SHALL ALLOW FOR DECOMMISSIONING THE FOLLOWING ITEMS IN THE BUILDING AS INDICATED ON THE DRAWINGS:

- THE EXISTING EMERGENCY LIGHTING SERVICES INSTALLATION THROUGHOUT THE BUILDING SHALL BE DECOMMISSIONED AND REMOVED INCLUDING ALL EMERGENCY LIGHT FITTINGS, CABLING, CONTAINMENT, ETC.
- THE EXISTING FIRE ALARM SERVICES INSTALLATION THROUGHOUT THE BUILDING SHALL BE DECOMMISSIONED AND REMOVED INCLUDING ALL SMOKE DETECTORS, HEAT DETECTORS, PANELS, ETC.

8. THE CONTRACTOR SHALL BE RESPONSIBLE TO IDENTIFY SUITABLE FINAL ROUTES FOR ALL CONTAINMENT AND TRAY THROUGHOUT THE BUILDING FOR THE NEW ELECTRICAL SERVICES AND CABLING. NEW MAIN RUNS OF ELECTRICAL TRUNKING/TRAY SHALL BE INSTALLED IN THE AREAS AS INDICATED ON THE DRAWINGS BUT THIS IS INDICATIVE ONLY AND IF THE CONTRACTOR FINDS A MORE CONVENIENT ROUTE FOR ELECTRICAL CONTAINMENT ON SITE THEN THAT WILL BE ACCEPTABLE.

CABLE CONTAINMENT SERVICES NOTES:

11. CABLE CONTAINMENT SHALL BE INSTALLED THROUGHOUT THE BUILDING AS INDICATED ON THE DRAWINGS.

12. THIS DRAWING INDICATES MAIN RUNS FOR CABLE CONTAINMENT & 2 COMPARTMENT TRUNKING. THE ELECTRICAL CONTRACTOR SHALL INSTALL ALL FINAL BRANCH RUNS, RISERS, OFFSETS, ETC. AS REQUIRED TO PROVIDE A COMPLETE CONTAINMENT SYSTEM IN EACH CASE. THIS INFORMATION IS INDICATIVE ONLY. THE ELECTRICAL CONTRACTOR SHALL PROVIDE ALL BENDS, TEE'S, AND CROSS-OVERS THAT REQUIRED TO MEET CURRENT ETCI STANDARDS, THE ROUTES INDICATED ARE MAIN ROUTES ONLY AND SECONDARY ROUTES INTO ROOMS ARE NOT INDICATED. THE CONTRACTOR SHALL BE RESPONSIBLE FOR THE SUPPLY AND INSTALLATION OF ALL 2 COMPARTMENT TRUNKING TO ENSURE THE PROTECTION OF ALL THE CABLING. ALL 2 COMPARTMENT TRUNKING SHALL BE MANUFACTURED FROM GALVINISED STEEL AS SUPPLIED BY UNITRUNK (OR EQUIVALENT).

13. THE CONTRACTOR SHALL BE RESPONSIBLE FOR THE SUPPLY AND INSTALLATION OF ALL 2 COMPARTMENT TRUNKING TO ENSURE THE PROTECTION OF ALL THE CABLING. ALL 2 COMPARTMENT TRUNKING SHALL BE MANUFACTURED FROM GALVINISED STEEL.

14. AS INDICATED, ONLY THE MAIN RUNS OF 2 COMPARTMENT TRUNKING IN THE BUILDING ARE INDICATED. THE CONTRACTOR SHALL ALLOW FOR ALL CONTAINMENT FOR CABLING TO ALL EMERGENCY LIGHT FITTINGS IN THE CLASSROOMS, OFFICES, TOILETS, STORES, ETC. THROUGHOUT THE BUILDING. ALL CABLING TO THE EMERGENCY LIGHT FITTINGS THROUGHOUT THE BUILDING SHALL BE INSTALLED IN 25mm GALVANISED STEEL METAL CONDUIT. THE MAIN RUNS IN CORRIDORS SHALL BE INSTALLED IN 2 COMPARTMENT TRUNKING BUT THE CONTRACTOR SHALL ALLOW FOR ALL CABLING FROM THOSE MAIN RUNS TO BE INSTALLED IN 25mm STEEL METAL CONDUIT.

15. THE CONTRACTOR SHALL NOTE THE PHYSICAL SIZE OF ALL DISTRIBUTION EQUIPMENT. EQUIPMENT SHOWN IS INDICITVE ONLY. PHYSICAL DIMENSIONS MAY VARY IN ACCORDANCE WITH THE NOMINATED EQUIPMENT VENDOR. THE SUB CONTRACTOR SHALL CONFIRM ALL EQUIPMENT CABLE TRAY/RACK DIMENSIONS BEFORE INSTALLATION.

16. THE CONTRACTOR SHALL VERIFY THE LOCATION OF ALL TERMINATIONS AND CABLE ROUTEWAY DETAILS.

17. THE CONTRACTOR TO INCLUDE FOR ALL NECESSARY FIXINGS & SUPPORTS REQUIRED TO COMPLETE INSTALLATION. ALL EXPOSED WALL MOUNTED TRAYS MUST BE CLIPPED/LIDDED.

SITE SERVICES NOTES:

18. ALL BUILDERS WORK AND TRENCHING SHALL BE CARRIED OUT BY THE CONTRACTOR. THE CONTRACTOR SHALL CO-ORDINATE AT AN EARLY STAGE ON THE PROVISION OF OPES, TRENCHES, OPENINGS, ETC. FOR THE NECESSARY INSTALLATION OF THE ELECTRICAL SITE SERVICES AS INDICATED ON THE DRAWINGS. TRENCHING, DUCTING AND PIPING TO BE INSTALLED AS PER DRAWINGS AND AS PER DETAILS ON THE DRAWINGS.

19. THE CONTRACTOR SHALL BE RESPONSIBLE FOR EXCAVATING AND DIGGING TRENCHES BETWEEN THE BUILDINGS FOR THE SUPPLY OF UNDERGROUND ELECTRICAL CABLING BETWEEN THE BUILDINGS AS INDICATED ON THE DRAWINGS. THE CONTRACTOR SHALL ALSO ALLOW FOR THE SUPPLY AND INSTALLATION OF THE UNDERGROUND uPVC DUCTING IN THE TRENCHES FOR THE UNDERGROUND CABLING BETWEEN THE BUILDINGS. REFER TO THIS DRAWING FOR THE LOCATIONS OF TRENCHING AND UNDERGROUND DUCTING REQUIRED BETWEEN BUILDINGS.

20. FINAL LOCATION OF ALL UNDERGROUND TRENCHING SHALL BE AGREED ON SITE WITH THE EMPLOYERS REPRESENTATIVE AND THE CLIENT.

21. THE CONTRACTOR SHALL ALLOW FOR ALL NECESSARY BUILDERS WORKS FOR THE NEW ELECTRICAL WORKS AND ALSO FOR ALL ASSOCIATED EXTERNAL TRENCHING.

22. THE CONTRACTOR SHALL VERIFY THE LOCATION OF ALL UNDERGROUND AND OVERHEAD UTILITY SERVICES BEFORE EXCAVATION COMMENCES. CAREFUL HAND DIGGING OF TRIAL HOLES USING A SAFE DIGGING PRACTICE SHALL BE USED FOR ACCURATE SERVICE LOCATION AND PRIOR TO USING A MECHANICAL EXCAVATOR IN THE VICINITY OF SERVICES. CABLE DEPTHS MAY NOT BE ASSUMED.

23. SEE DETAILS ON THIS DRAWING FOR REQUIREMENTS OF TRENCHING AND UNDERGROUND DUCTING FOR THE NECESSARY UNDERGROUND ELECTRICAL CABLING.

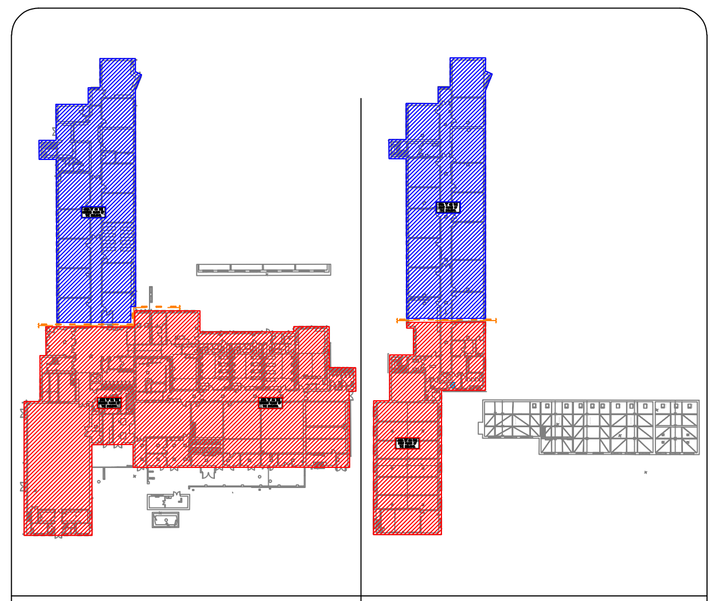

'AREA A' OF THE GROUND & FIRST FLOOR OF THE BUILDING.

'AREA A' OF THE GROUND & FIRST FLOOR OF THE BUILDING.

KEY PLAN FOR THE BUILDING (SCALE 1:500)

REV	DATE	PREPARED BY/PROJECT ENGINEER	QUALITY CHECK BY:
T1	22.07.26	R. WHYTE	M. GORMLEY

M&E CONSULTANT

Galileo ENERGY SERVICES

UNIT A6, M4 BUSINESS PARK,
MAYNOOTH ROAD,
CELBRIDGE,
CO. KILDARE.
Tel: 01-6274103
www.galileoenergy.ie

Copyright©

Drawing Status: TENDER

Job Title: ST. CIARAN'S CS, TOWNSPARK, KELLS, CO. MEATH.

Drawing Title: NEW CABLE CONTAINMENT TO BE INSTALLED IN 'AREA A' ON THE FIRST FLOOR OF THE BUILDING.

Architect:

Drawing No: 66(E003)

Job No.	Drawn by:	Scale:	Rev.
26-053	R.W	1:125 on A1	T1